TTV LUGGED VALVE

50L3040E0

Lugged Butterfly Valve · DN250-400

Ref. L2504005030 40E0

Carbon Steel ASTM body, Stainless Steel disc and EPDM seat. Supplied with a bare shaft and top flange for a gearbox or actuator.

- Face to face EN 558 Series 20
- Pressure tested to EN 12266-1, ISO 5208
- Tightness ISO 5208, zero leakage API 598
- ISO 5752 Connection F10 / F14
- Mounts between PN10/16 flanges

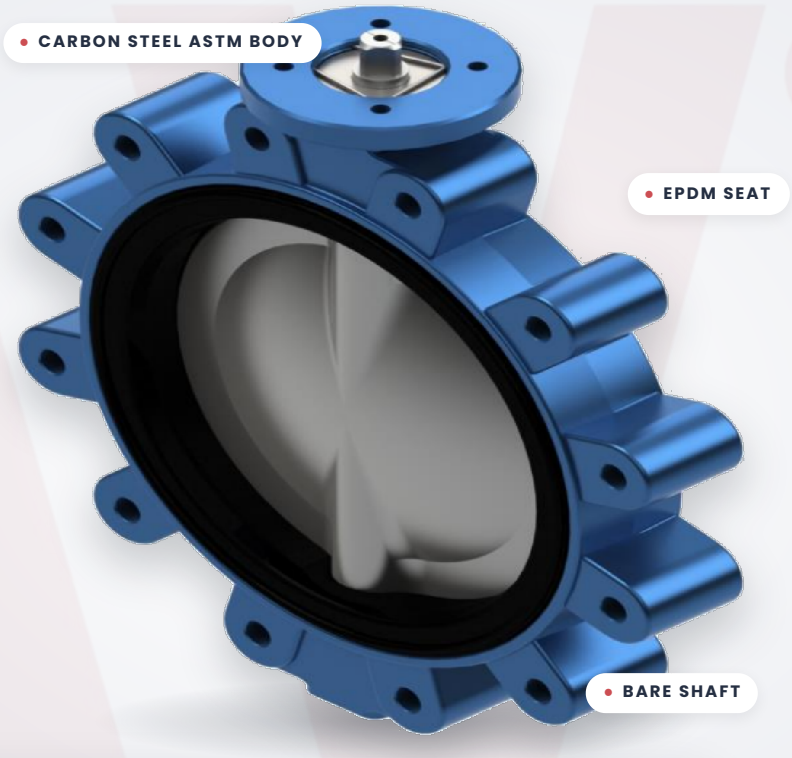

250-400 mm	PN10-16 · ANSI 150	-20...+110 °C	EPDM
NOMINAL SIZE (DN)	PRESSURE RATING	TEMPERATURE RANGE	SEAT MATERIAL

Construction.

MATERIALS OF CONSTRUCTION

BODY	SHAFT	DISC	SEAT
Carbon Steel ASTM	**Stainless Steel**	**Stainless Steel**	**EPDM**
A216 Grade WCB	ASTM A182 F304	ASTM A351 CF 8M	

MOUNTING BETWEEN FLANGES
PN10/16 · ISO 7005, DIN 2501, EN 1092-1 · ANSI class 150: ANSI B16.5

FACE TO FACE
EN 558 Series 20 · ISO 5752 Series 20 · API 609 Table 1 · BS 5155 Series 4

PRESSURE TEST
EN 12266-1, ISO 5208: Body: 1.5×PN · Seat: 1.1×PN

TIGHTNESS TEST
ISO 5208, zero leakage API 598

TEMPERATURE
-20°C up to +110°C

TECHNICAL DATA

Dimensions & standards.

Lug DN250-400 | PN10-16 & ANSI 150
Valve with bare shaft

Model shown on source sheet: 50L3040 EPDM. Source: TTV datasheet ref. L250400503040E0, revision 0 (2-1-2020).

DIMENSIONAL DRAWING

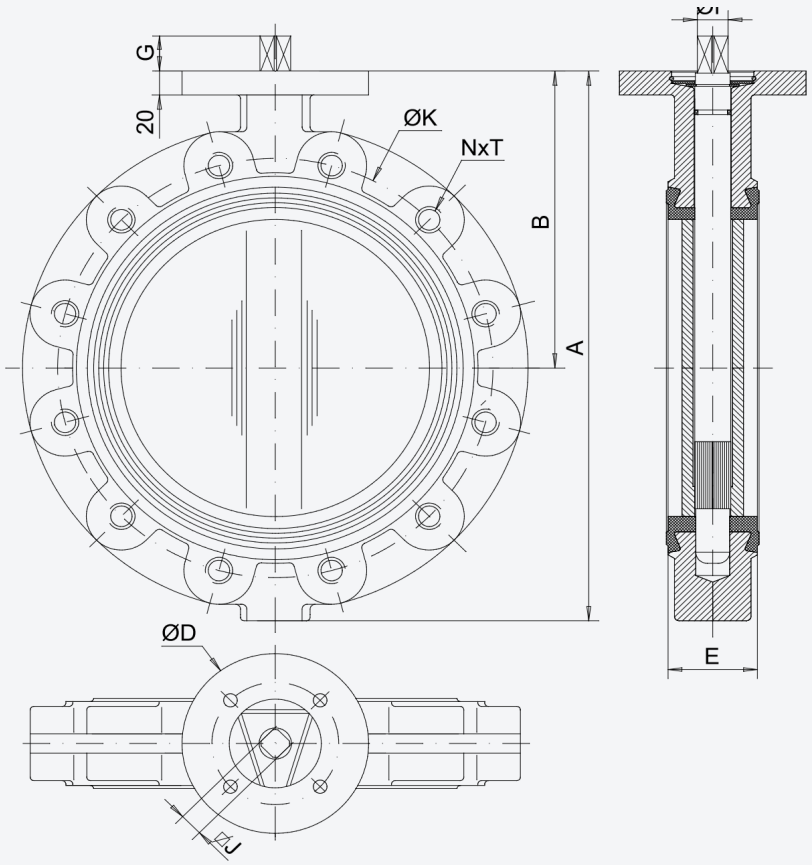

STANDARDS & RATINGS

Temperature
-20°C up to +110°C

Tolerances
ISO 2768-M

Face to Face
EN 558 Series 20
ISO 5752 Series 20
API 609 Table 1
BS 5155 Series 4

Pressure test according to
EN 12266-1, ISO 5208:
Body: 1.5×PN
Seat: 1.1×PN

Mounting between flanges
PN10/16
ISO 7005, DIN 2501, EN 1092-1
ANSI class 150: ANSI B16.5

Tightness test
ISO 5208, zero leakage API 598

Dimensions.

50L3040E0 · DN250-400

DN		A	B	D	E	F	G	J	PN10		PN16		ANSI150		ISO 5752 Connection	Weight Kg
mm	inch								K	N°×T1	K	N°×T1	K	N°×T1		
250	10"	460	248	150	68	25	24	19	350	12×M20	355	12×M24	362	12×7/8"	F10	28,5
300	12"	523	280	150	78	28	24	22	400	12×M20	410	12×M24	431.8	12×7/8"	F10	42
350	14"	570	300	170	78	28	29	22	460	16×M20	470	16×M24	476.3	12×1"	F14	53
400	16"	644	340	170	102	35	29	27	515	16×M24	525	16×M27	539.8	16×1"	F14	77

(Note) dimensions and standards may vary without announcement. Colours are orientative.

Data supplied by TTV and provided for reference only. Specifications may change without notice – please confirm details with Actuation Valve & Control before ordering.

Need this valve automated?
Talk to our UK team about gearboxes, actuators and complete actuated valve packages.
actuation.co.uk